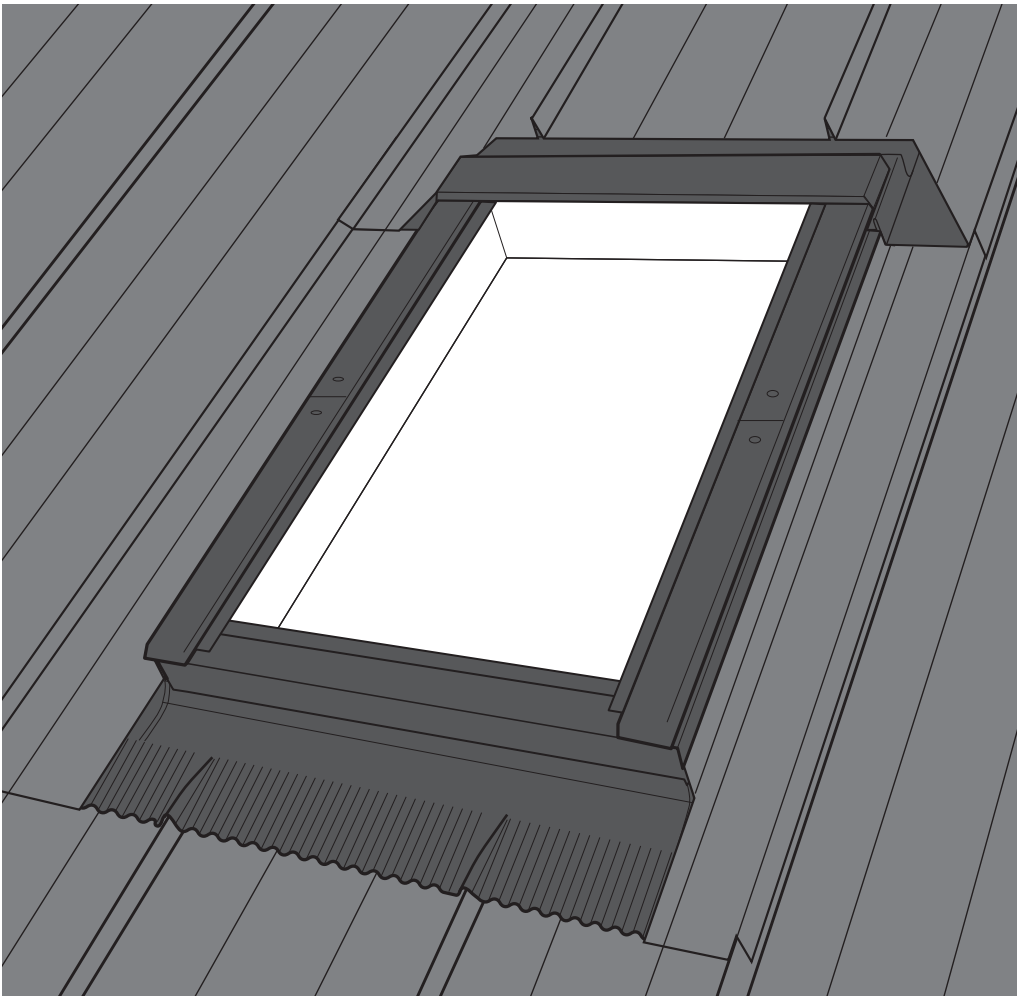

KSS

INS-KSS

01

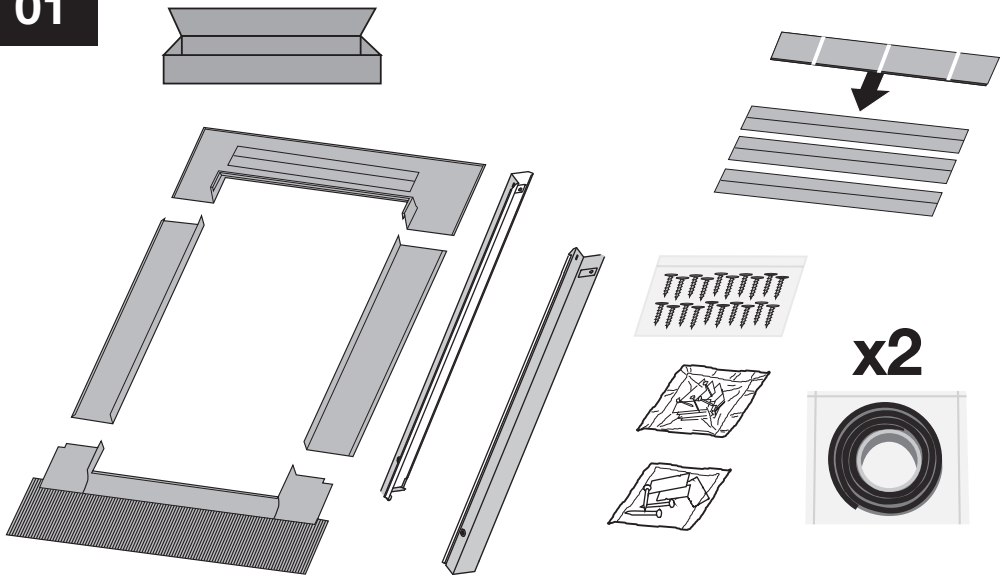

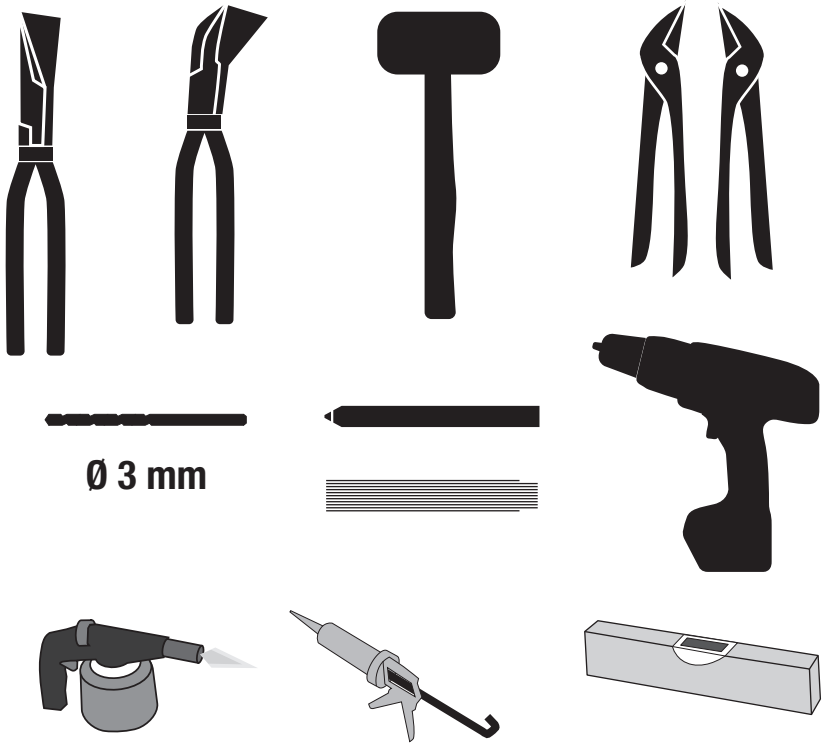

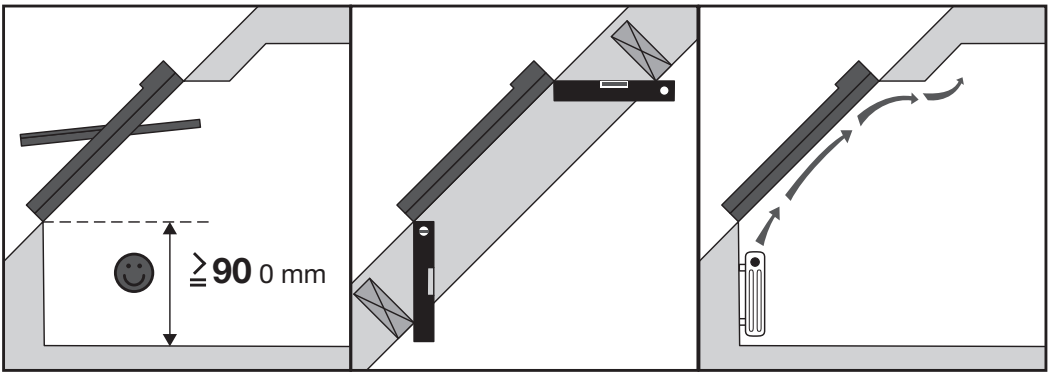
≧90 0 mm

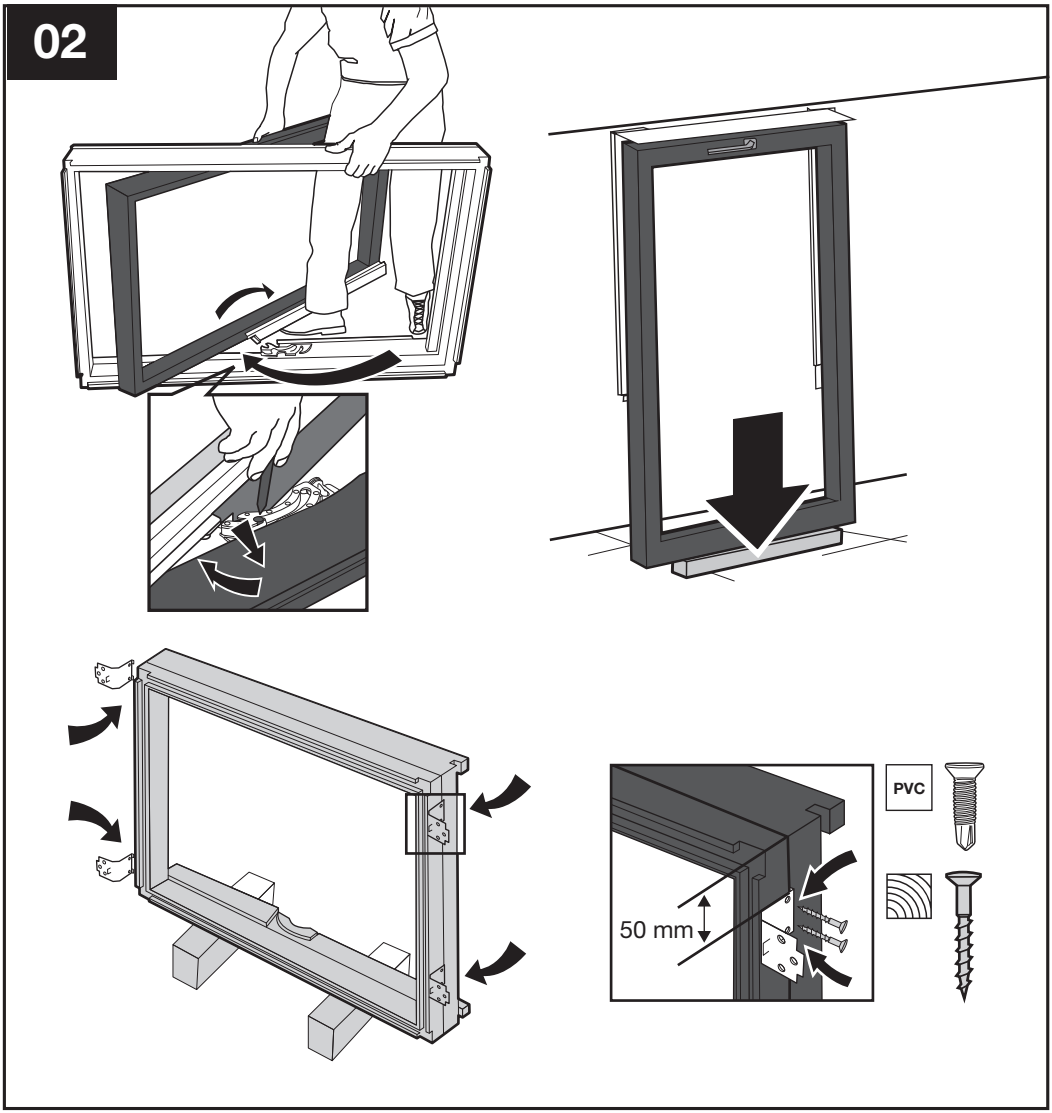
02
50 mm
PVC

03

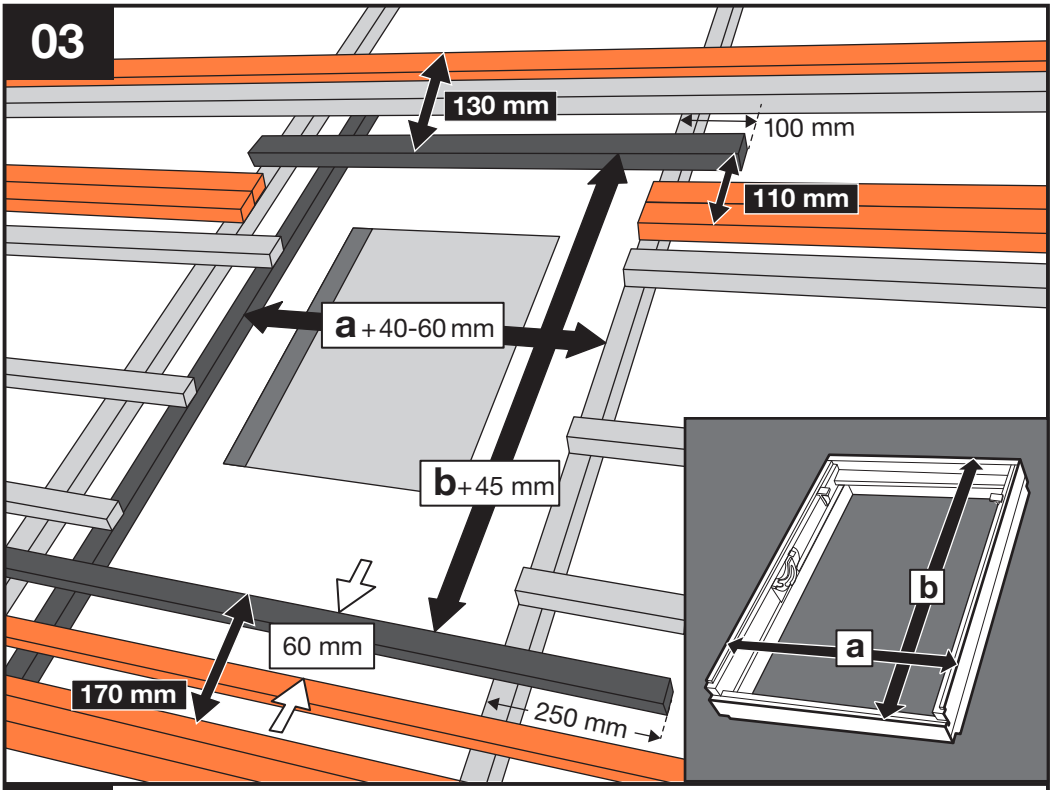
130 mm
100 mm
110 mm
a +40-60 mm
b +45 mm
60 mm
170 mm
250 mm
b
a

04

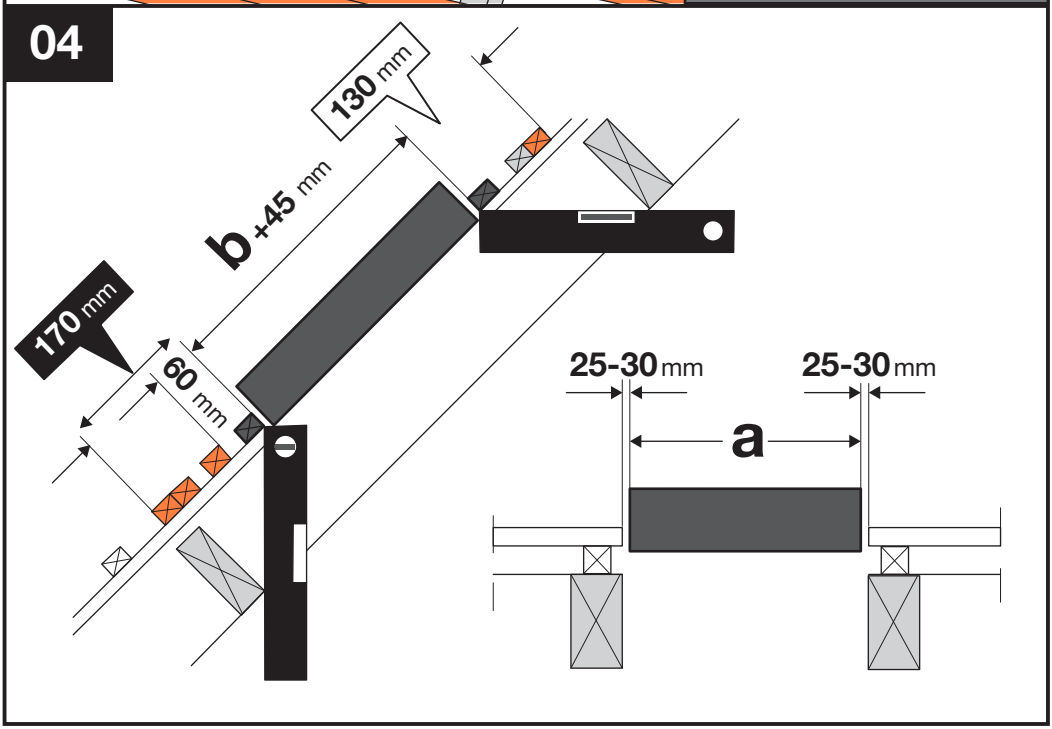
130 mm
b +45 mm
170 mm
60 mm
25-30 mm
25-30 mm
a

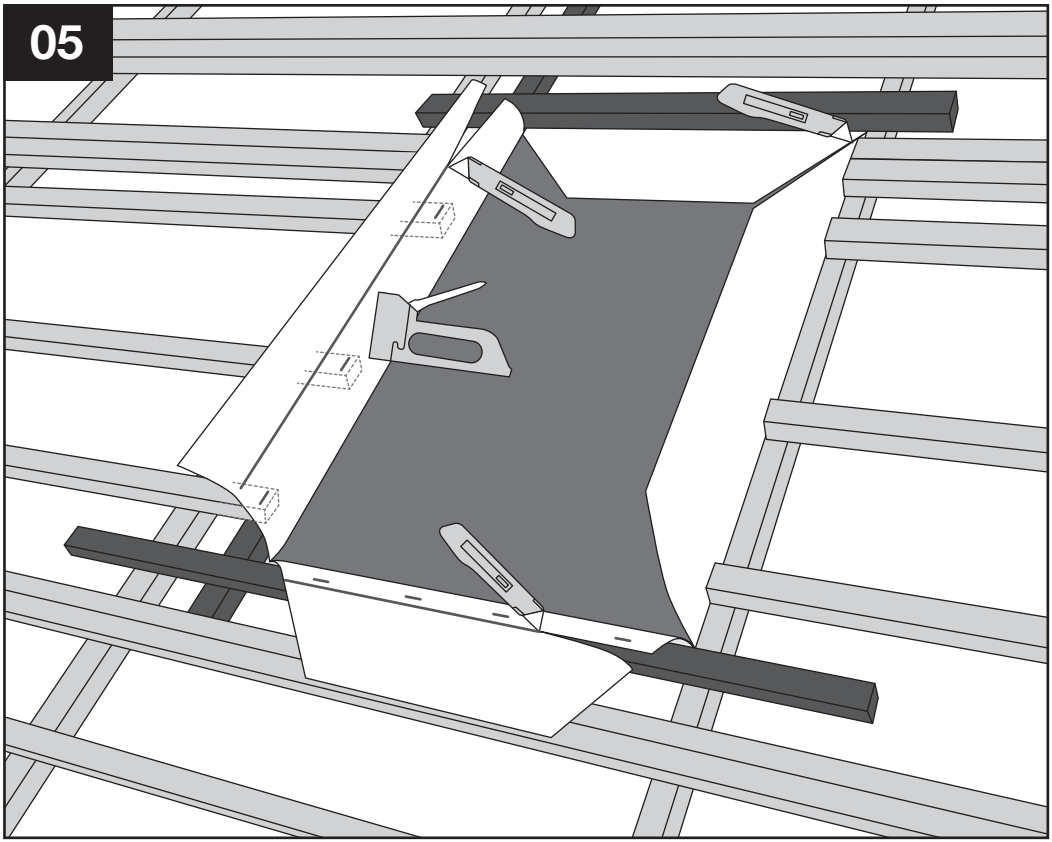
05

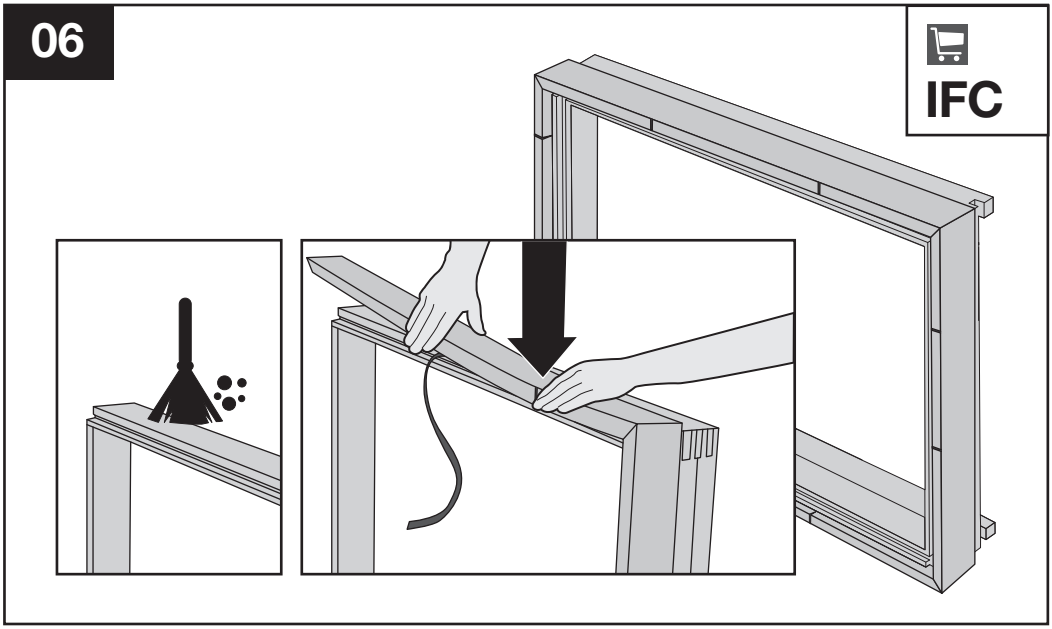
06
IFC

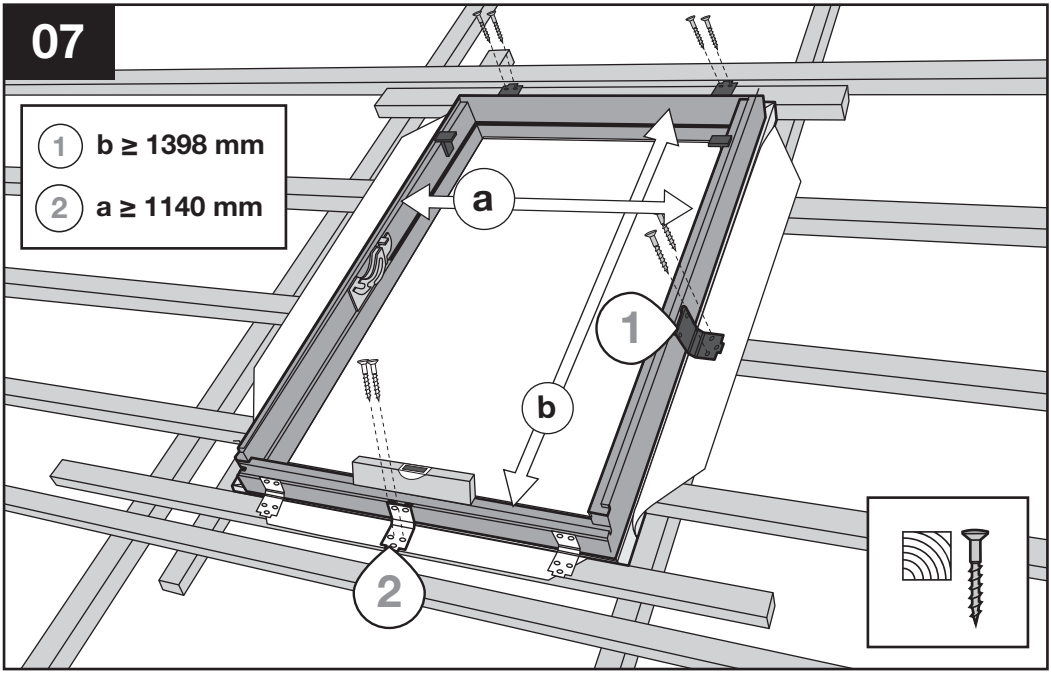
07
1 b ≥ 1398 mm
2 a ≥ 1140 mm
a
b
1
2

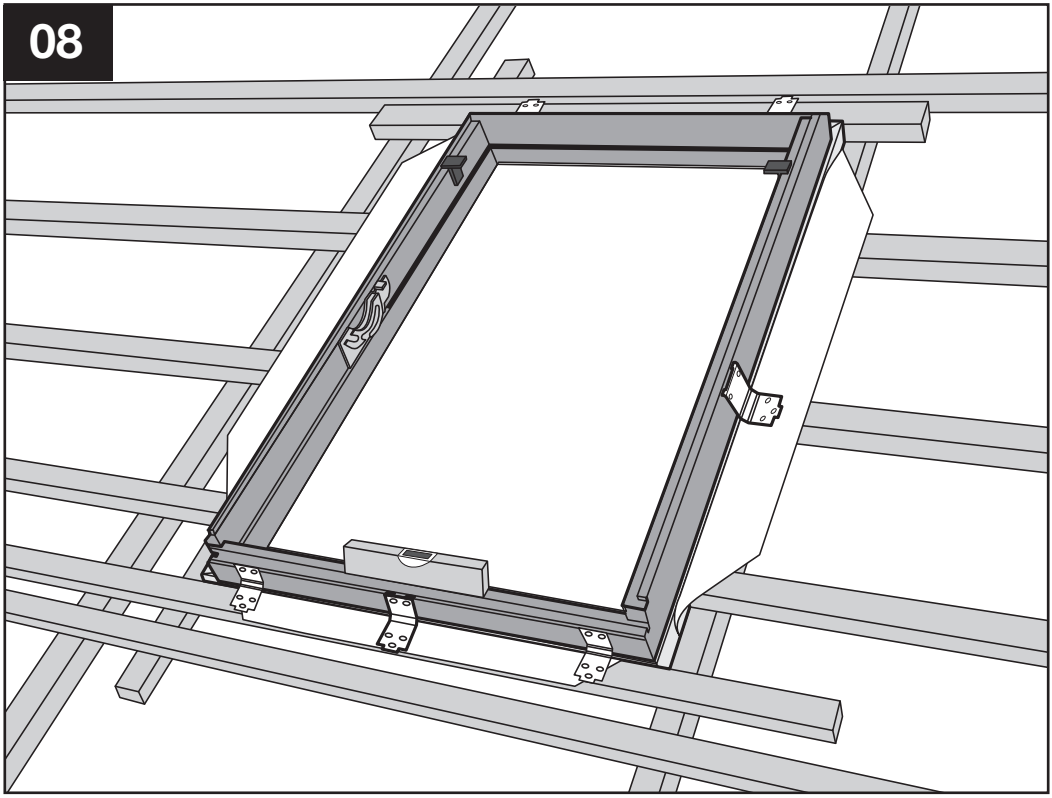
08

09a

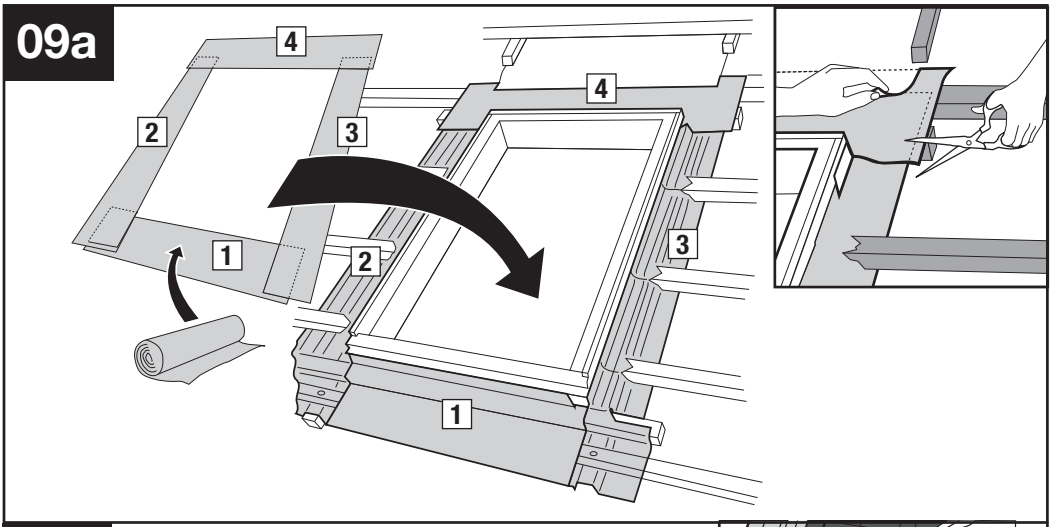

09b

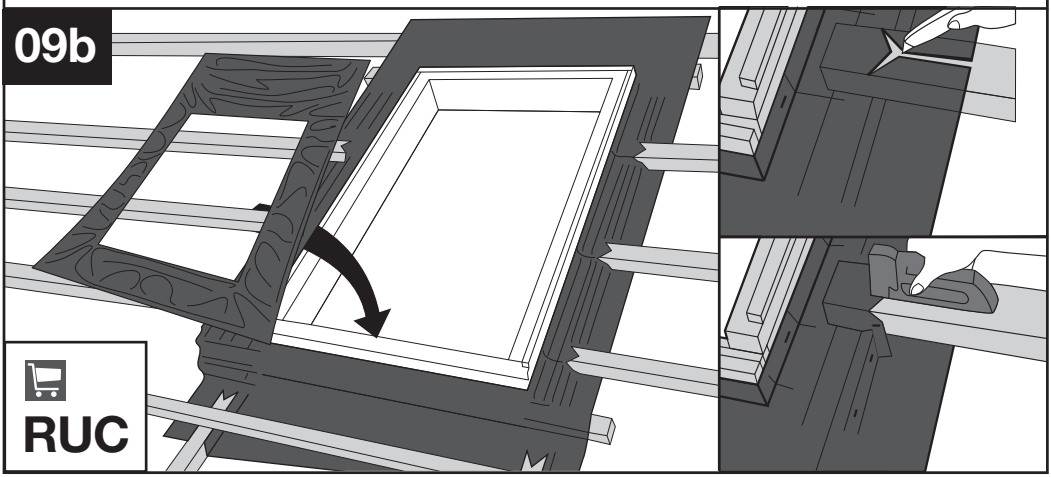

10

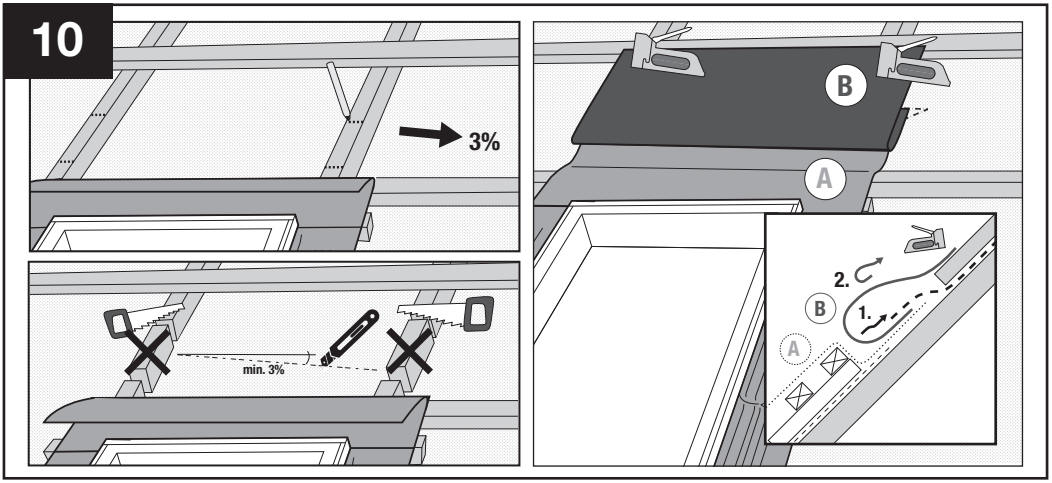

11

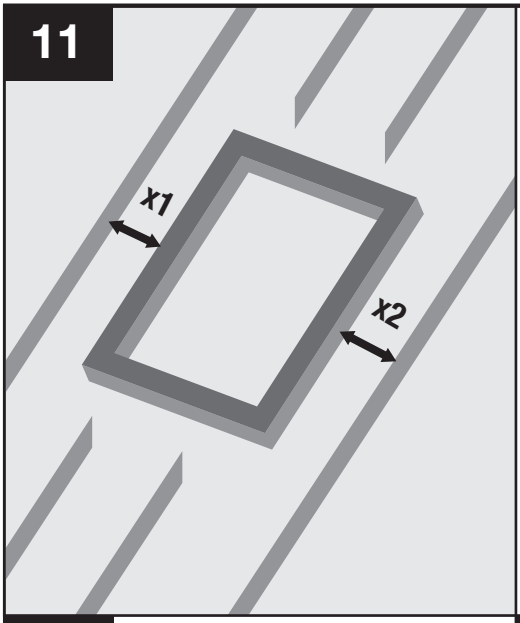

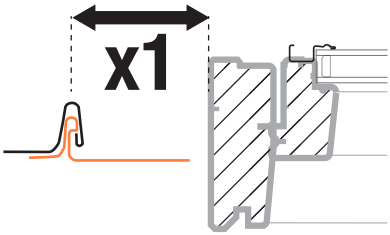

12a

x ≥ 150 mm

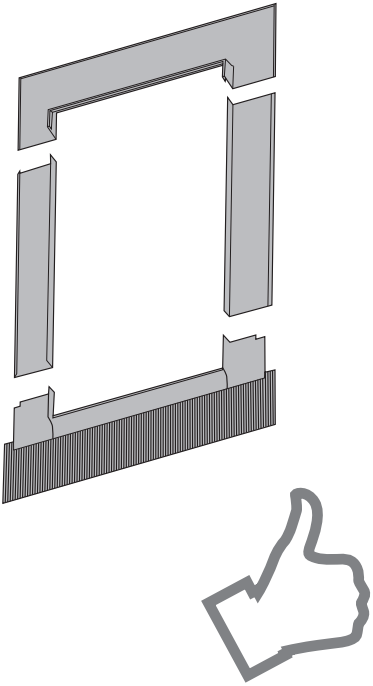

12b

30 mm ≤ x < 150 mm

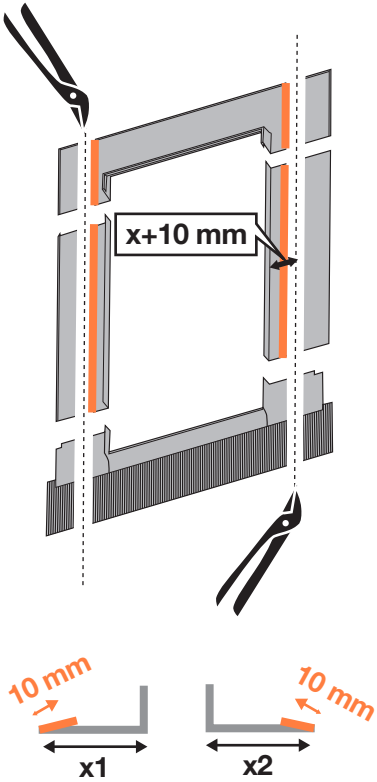

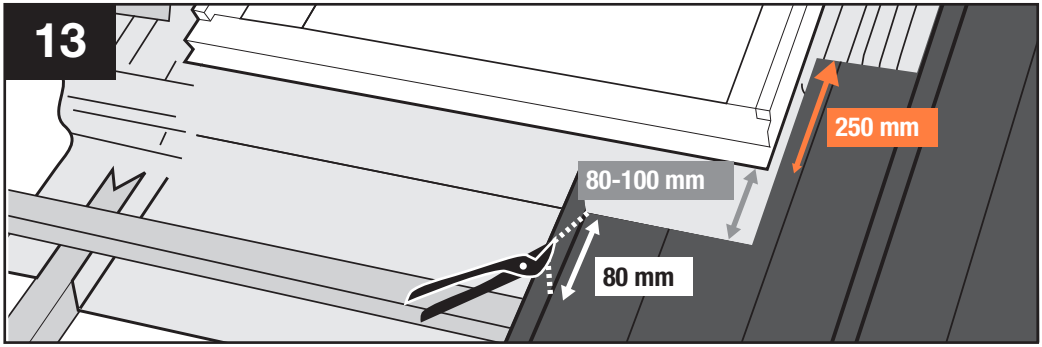
13
250 mm
80-100 mm
80 mm

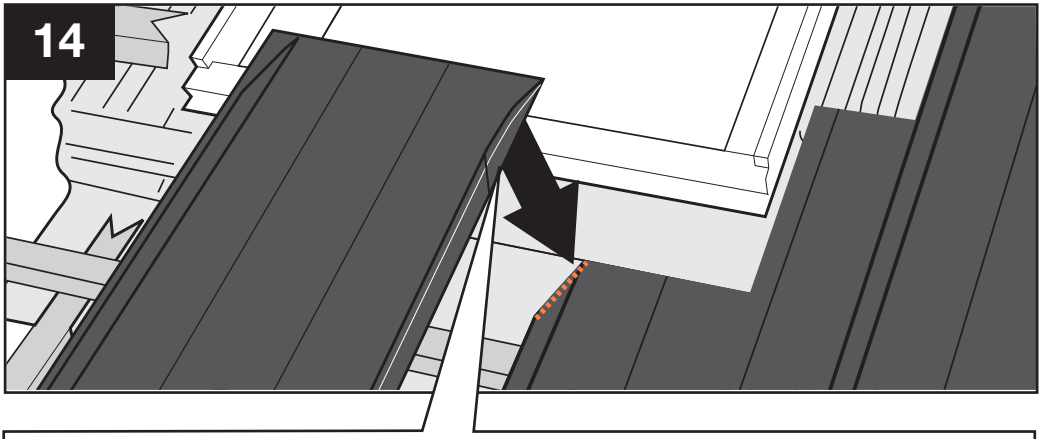
14

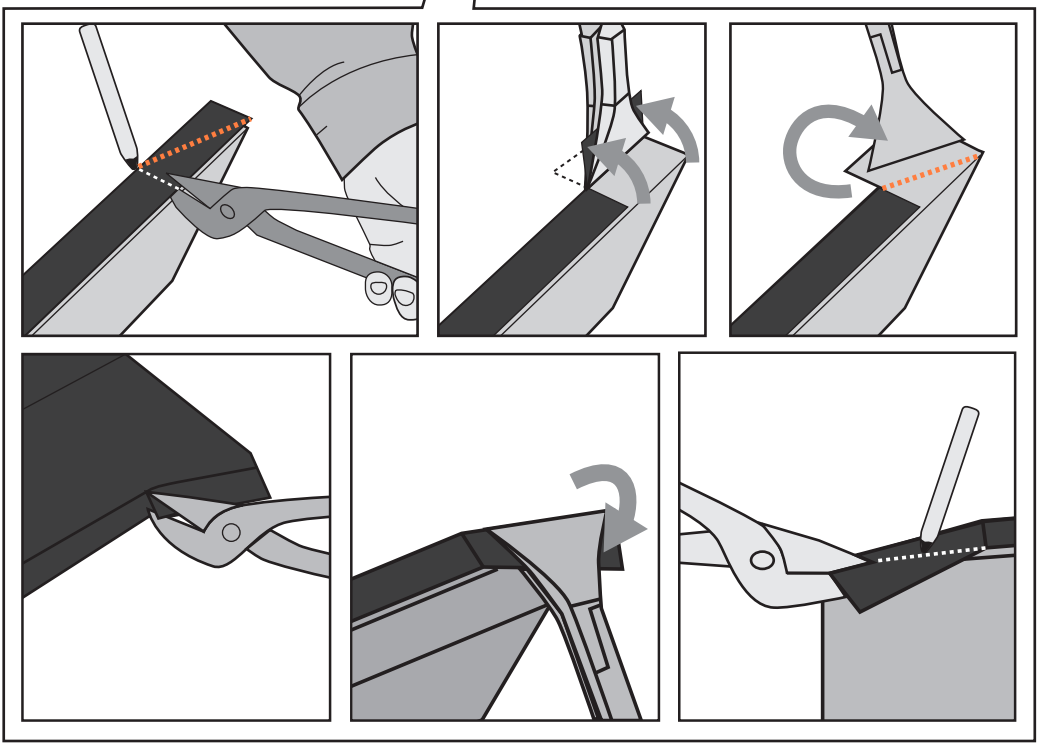

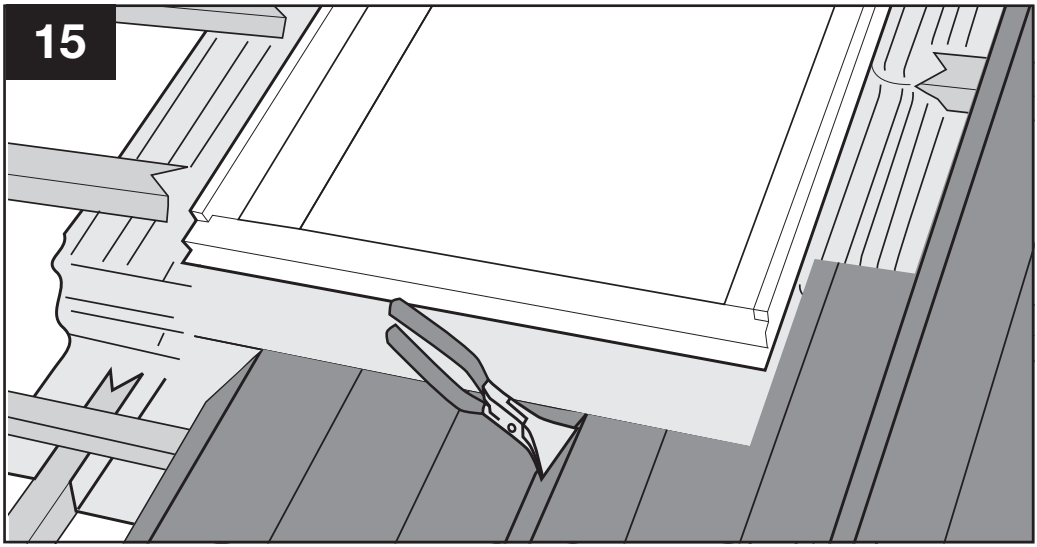
15

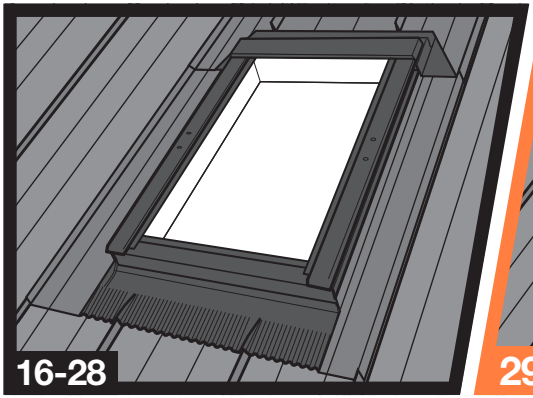
16-28

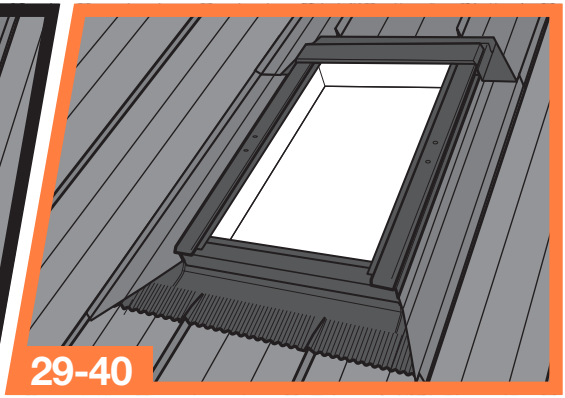
29-40

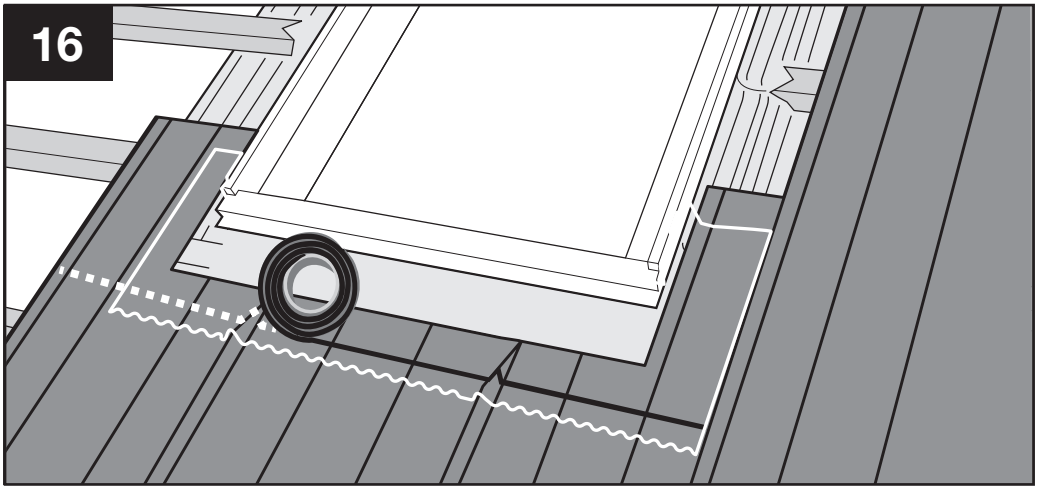
16

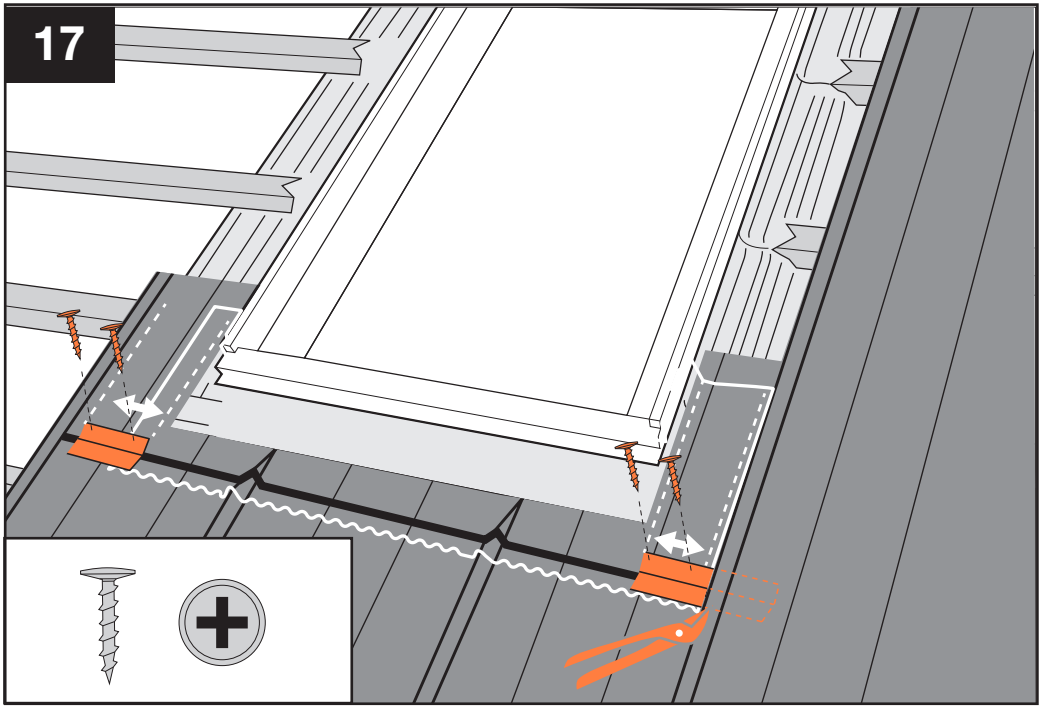
17

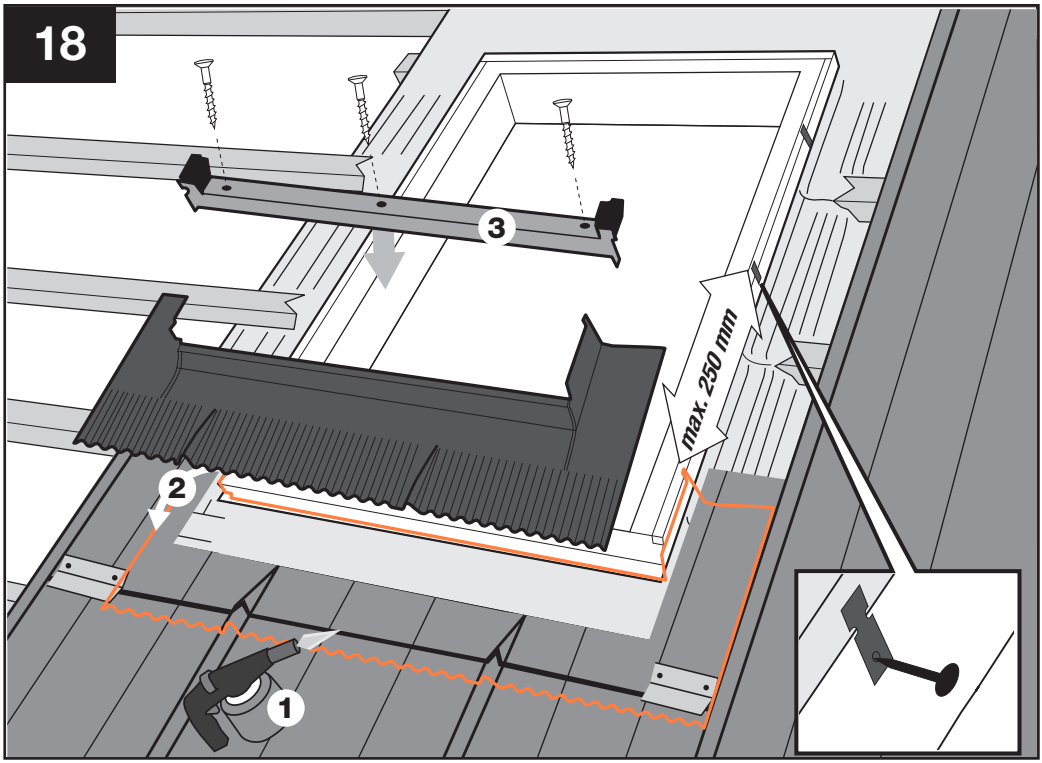
18
3
max. 250 mm
2
1

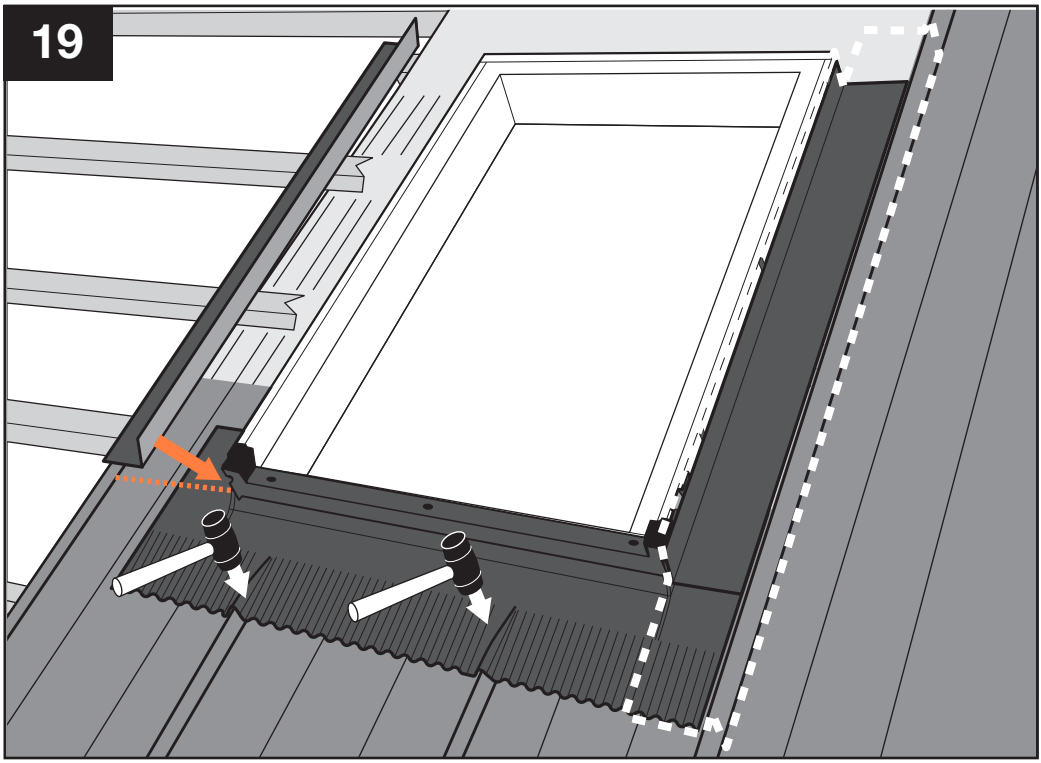
19

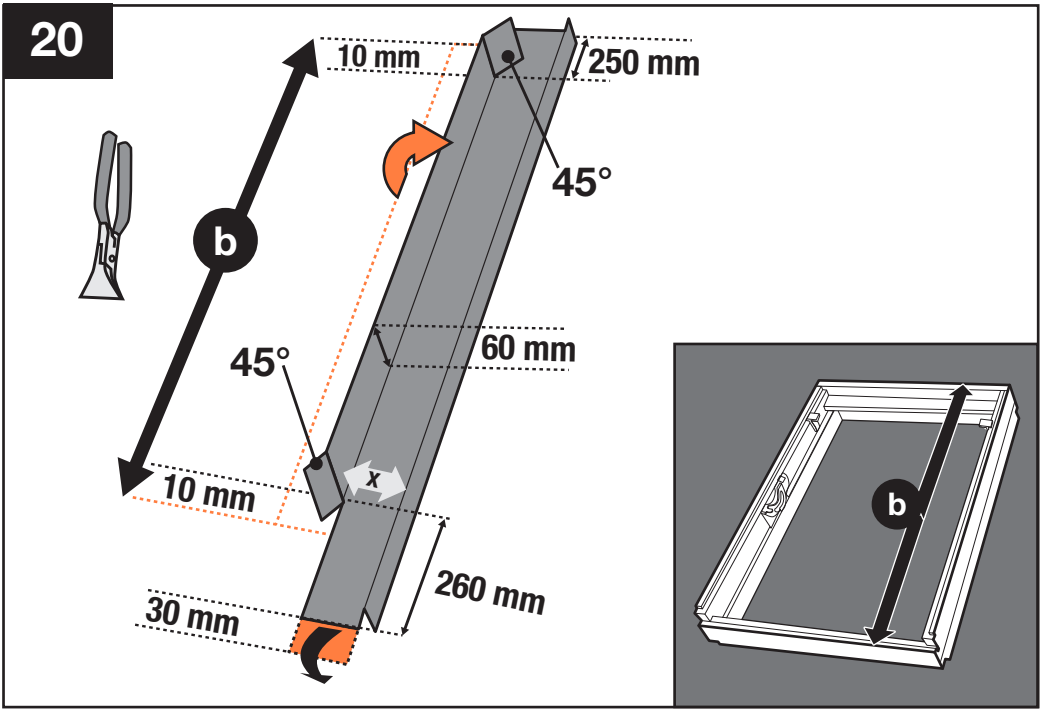
20
10 mm
250 mm
45°
b
60 mm
45°
x
10 mm
260 mm
30 mm
b

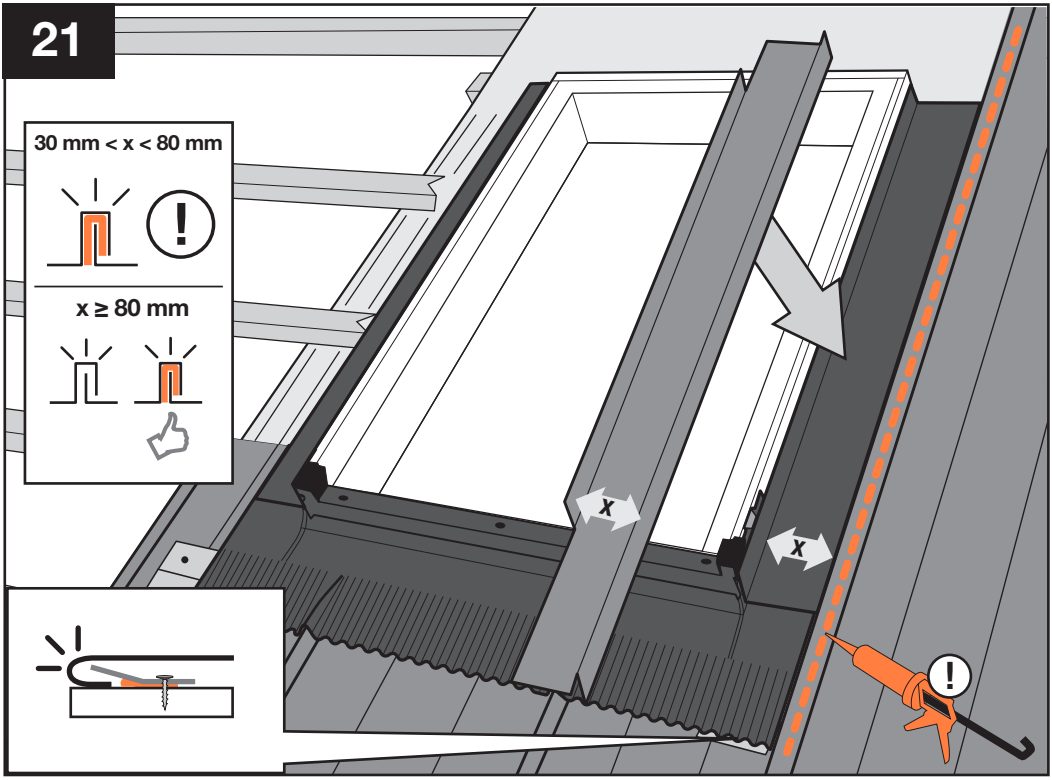
21
30 mm < x < 80 mm
x ≥ 80 mm
x
x

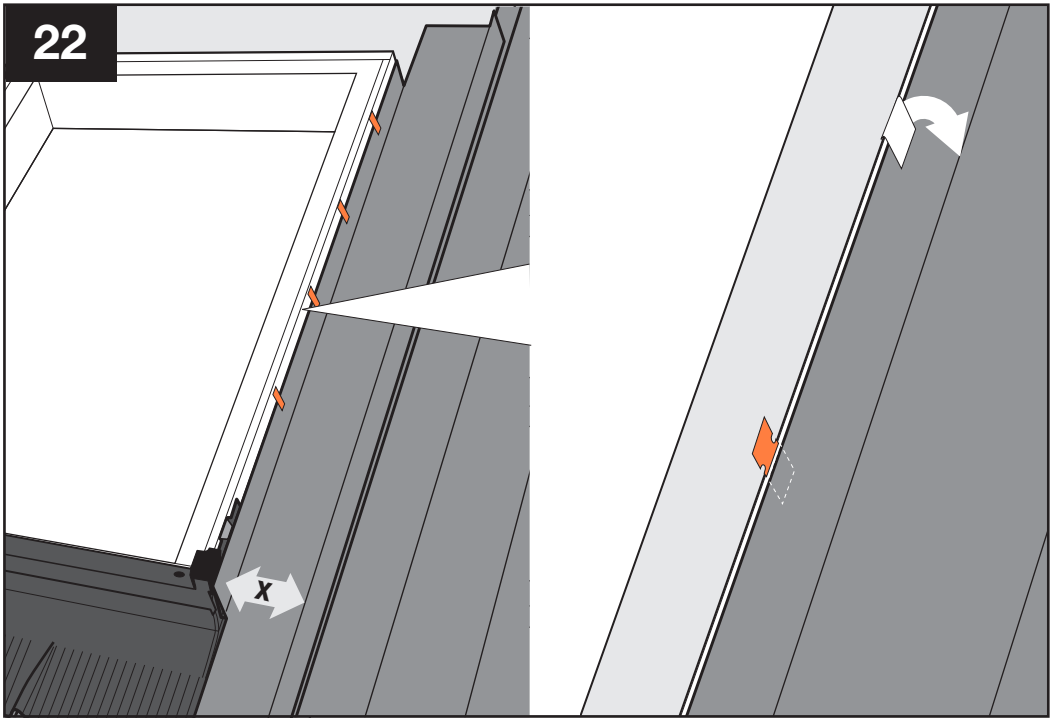
22
x

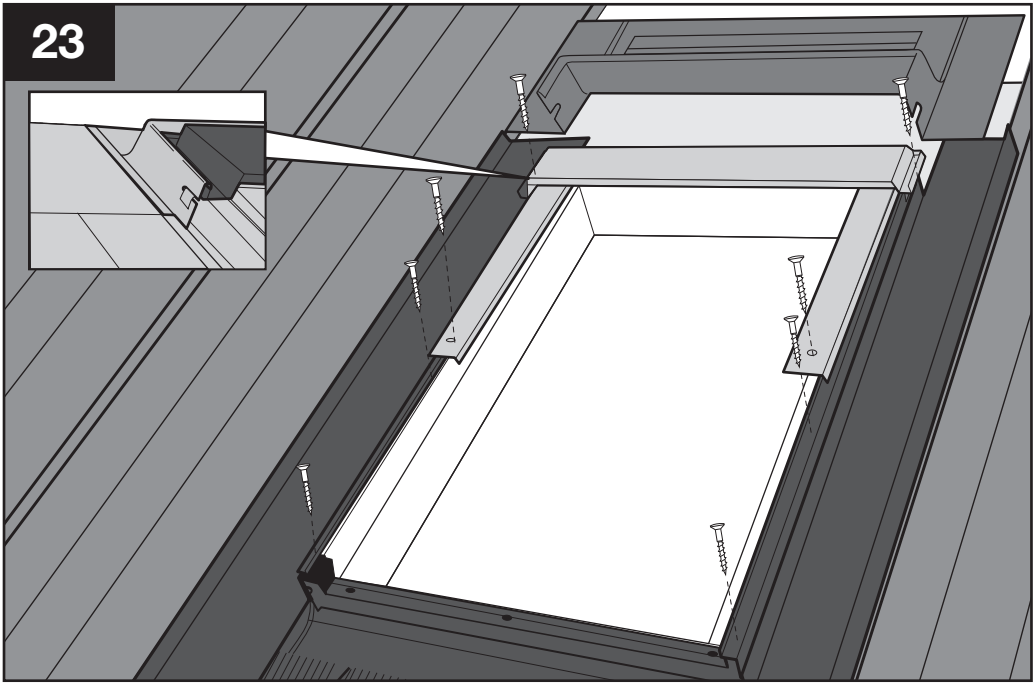
23

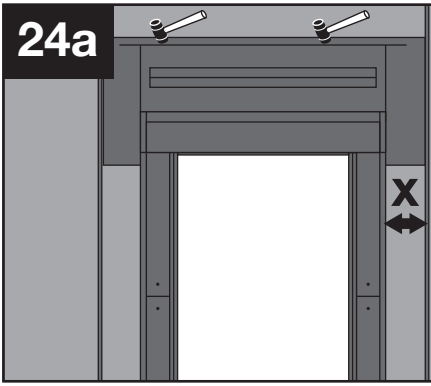
24a
X

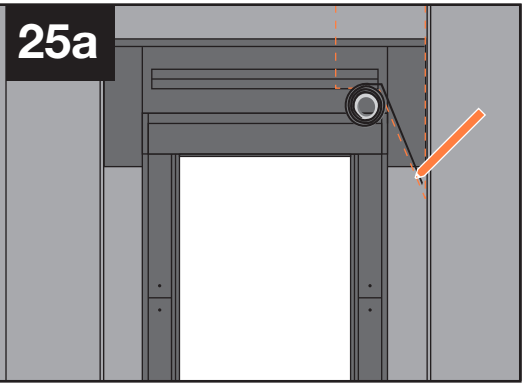
25a

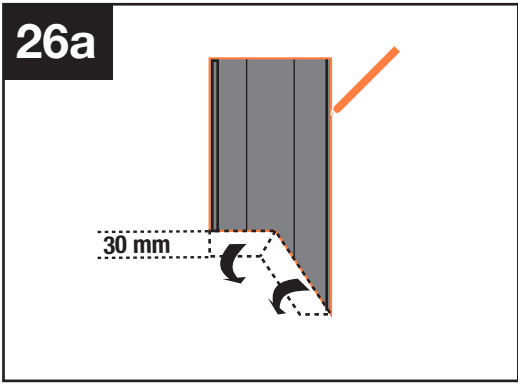
26a
30 mm

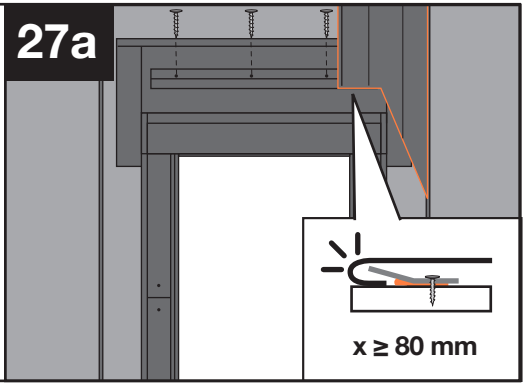
27a
x ≥ 80 mm

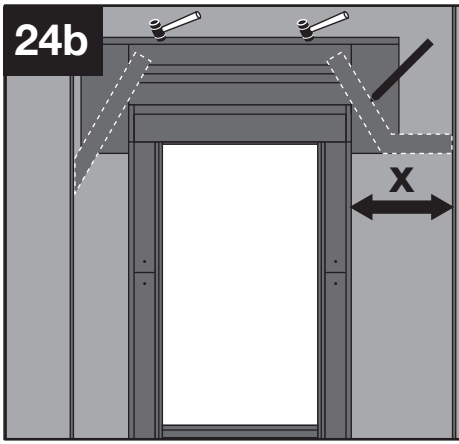
24b
X

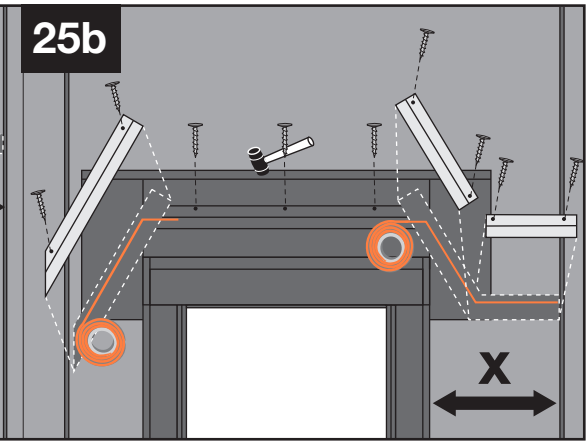
25b
X

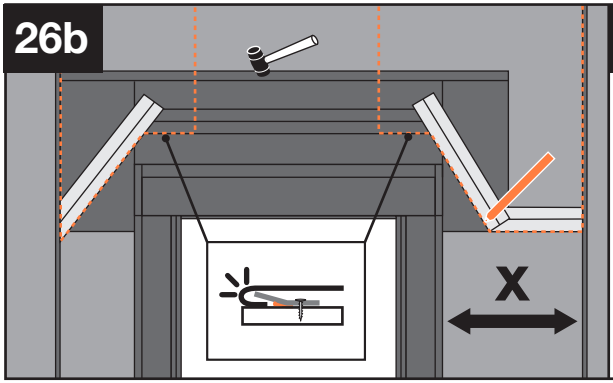
26b
X

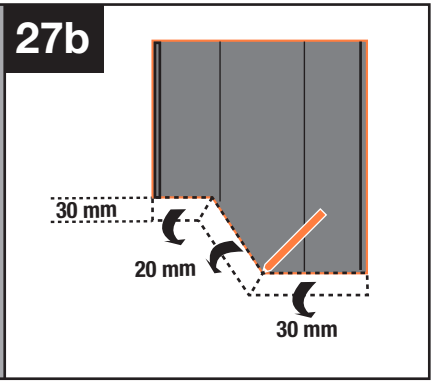
27b
30 mm
20 mm
30 mm

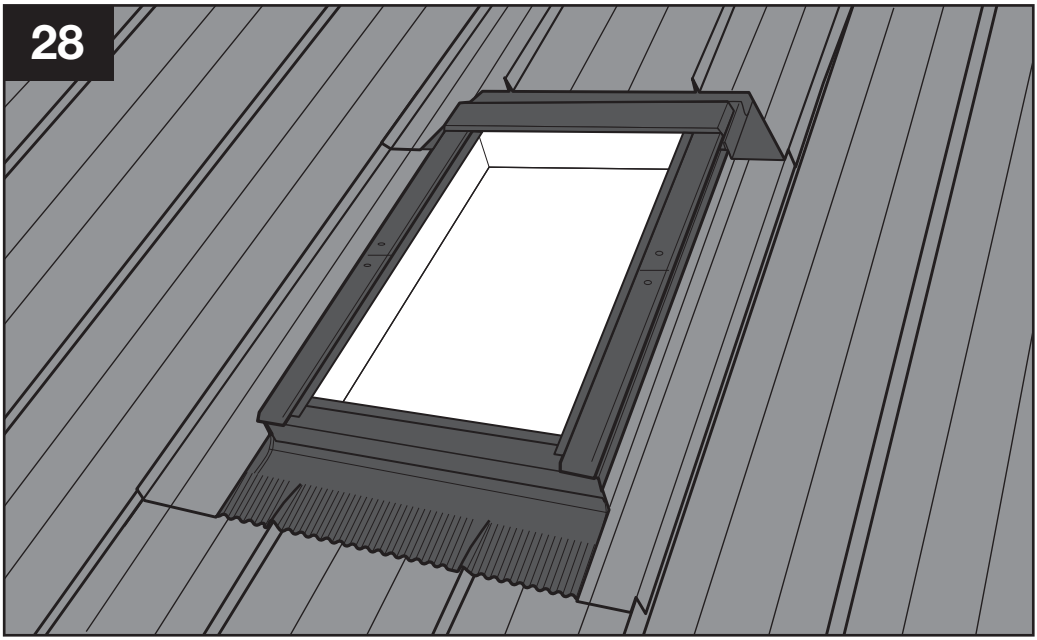
28

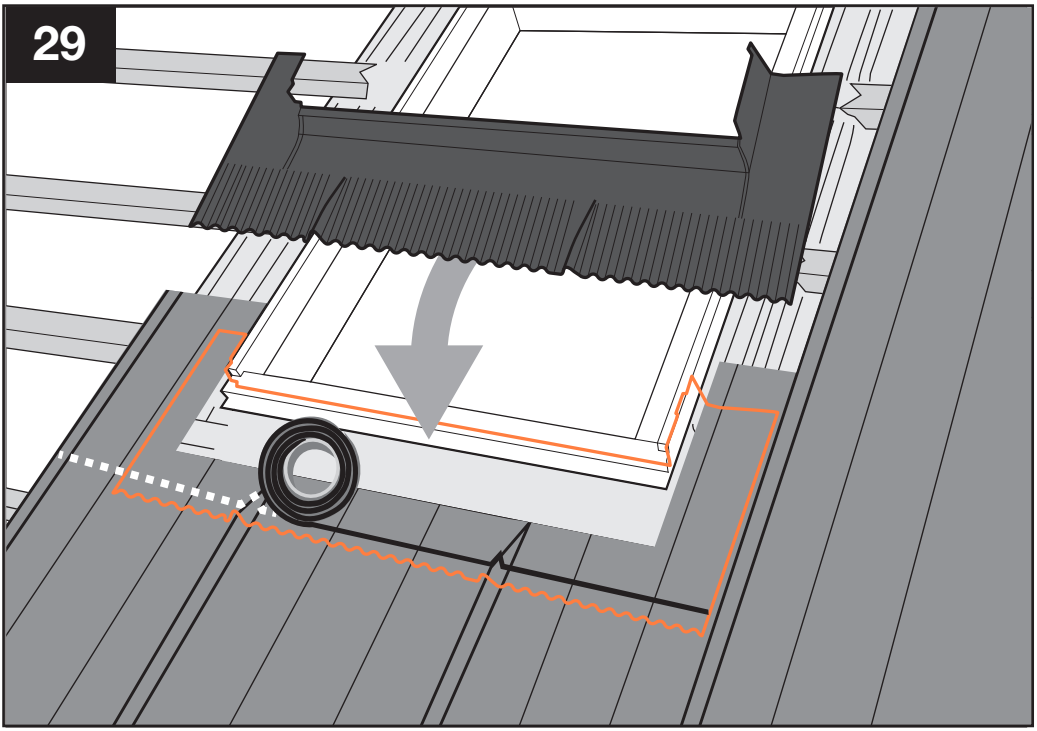
29

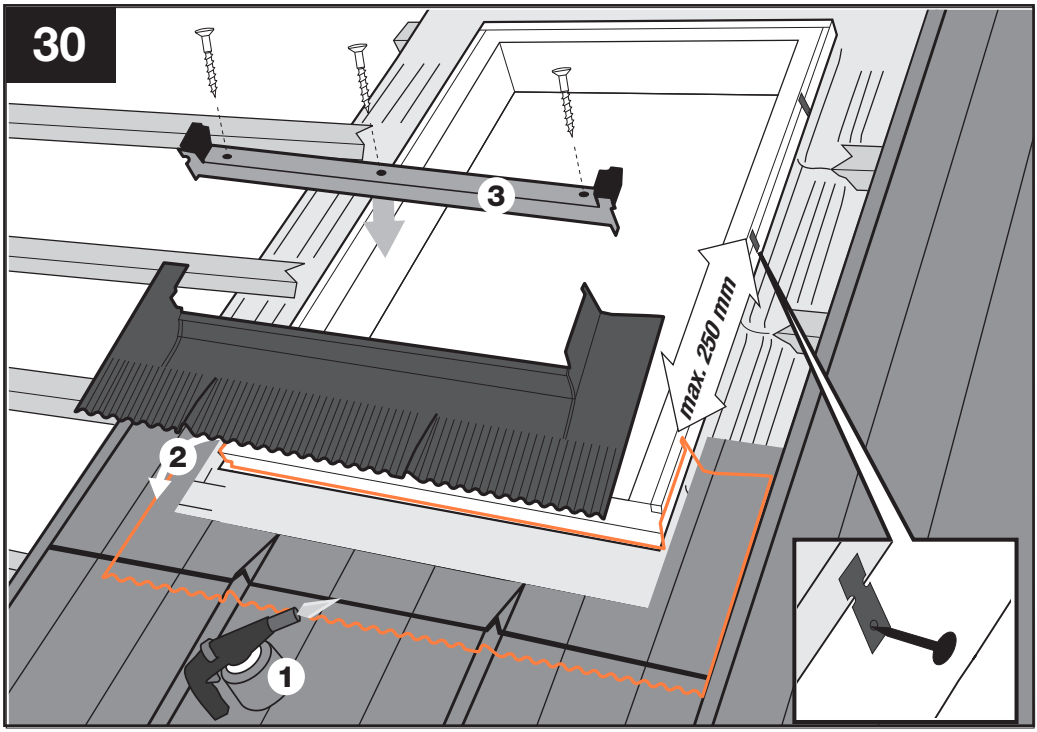
30
3
max. 250 mm
2
1

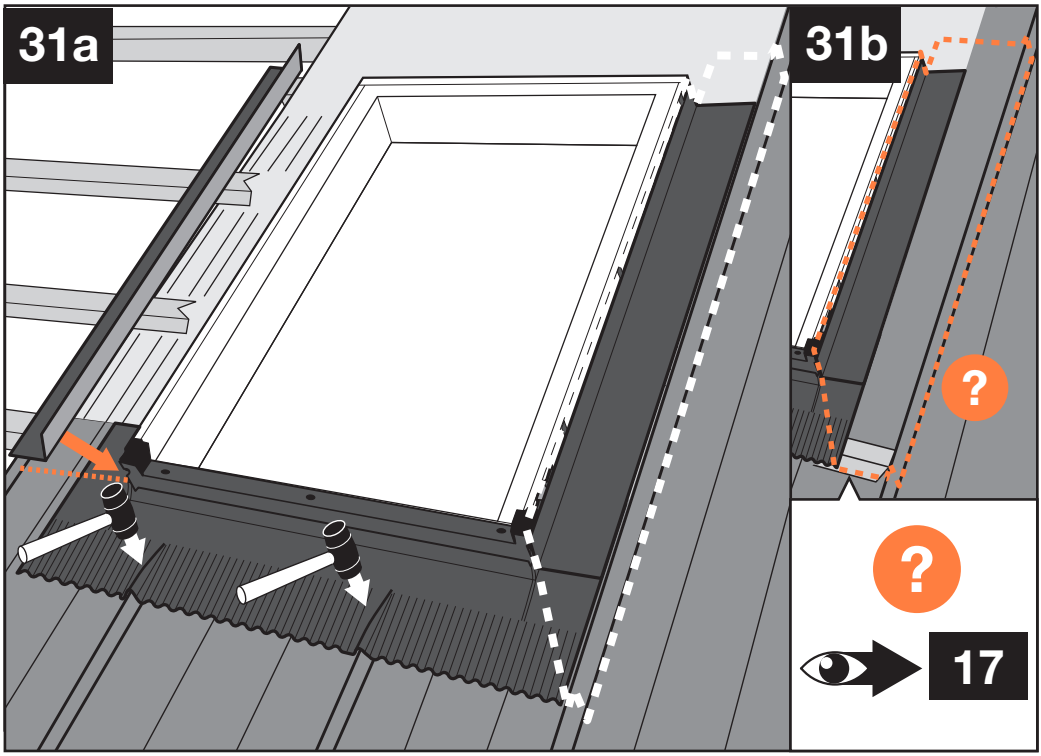
31a
31b
?
?
17

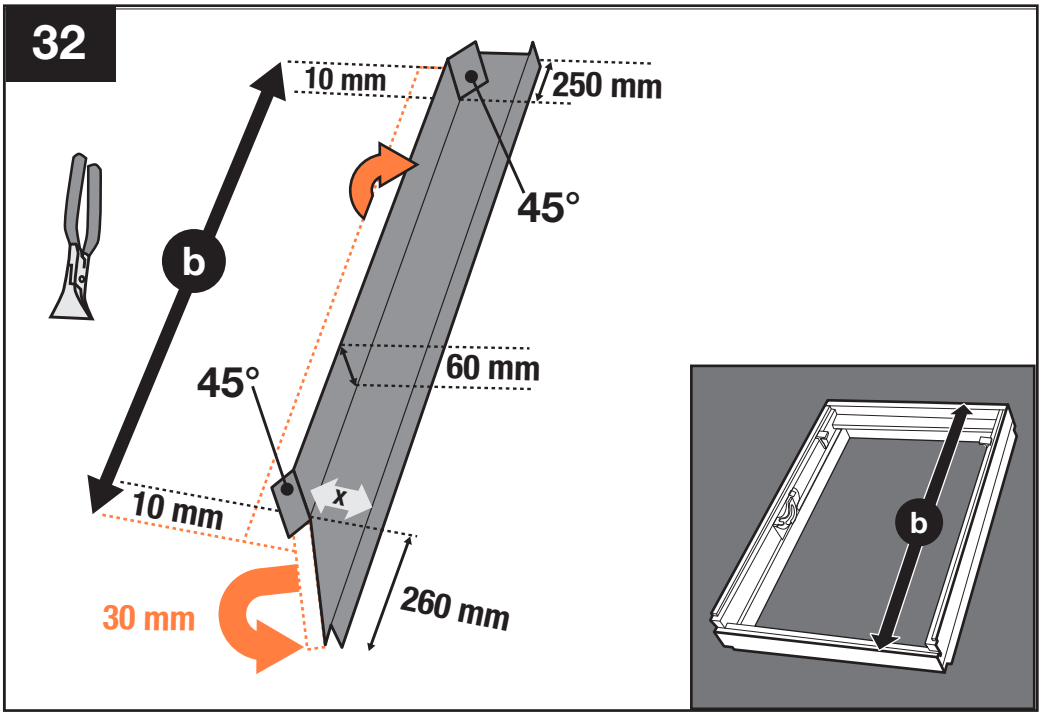
32
10 mm
250 mm
45°
b
60 mm
45°
x
10 mm
30 mm
260 mm
b

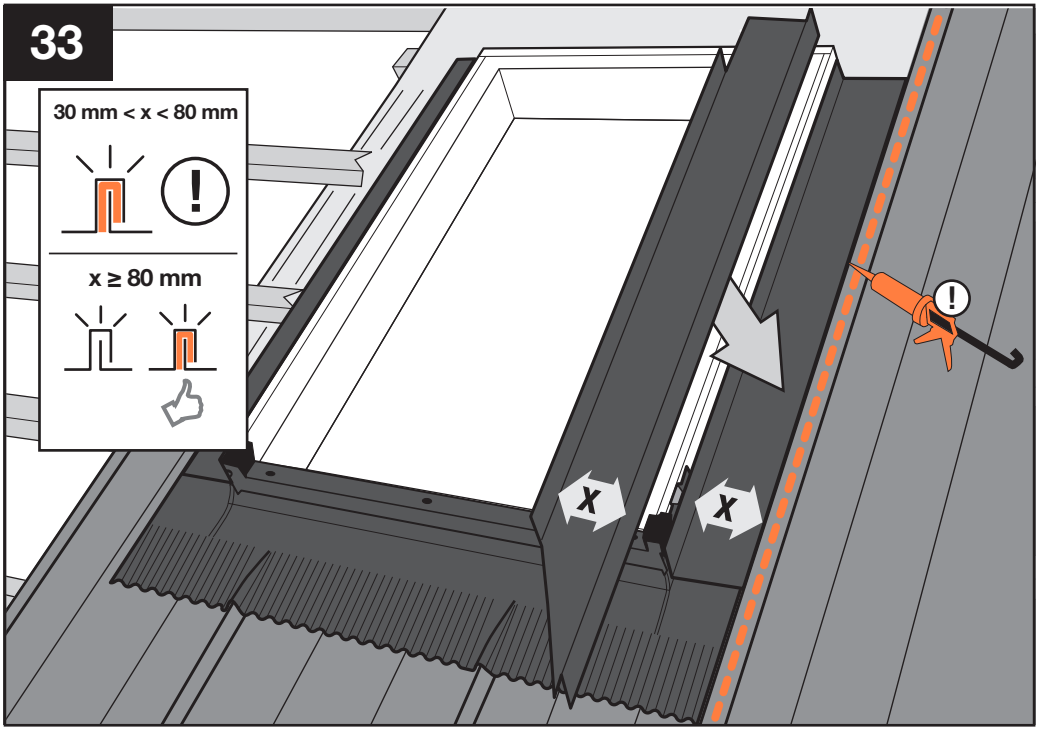
33
30 mm < x < 80 mm
x ≥ 80 mm
x
x

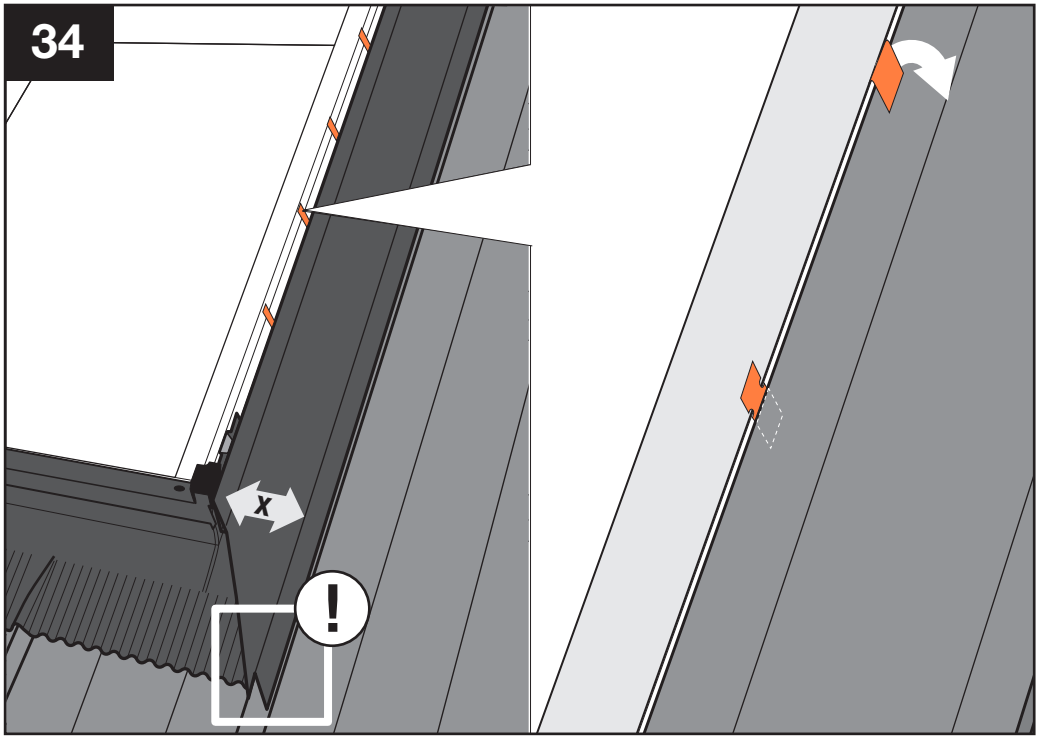
34
x

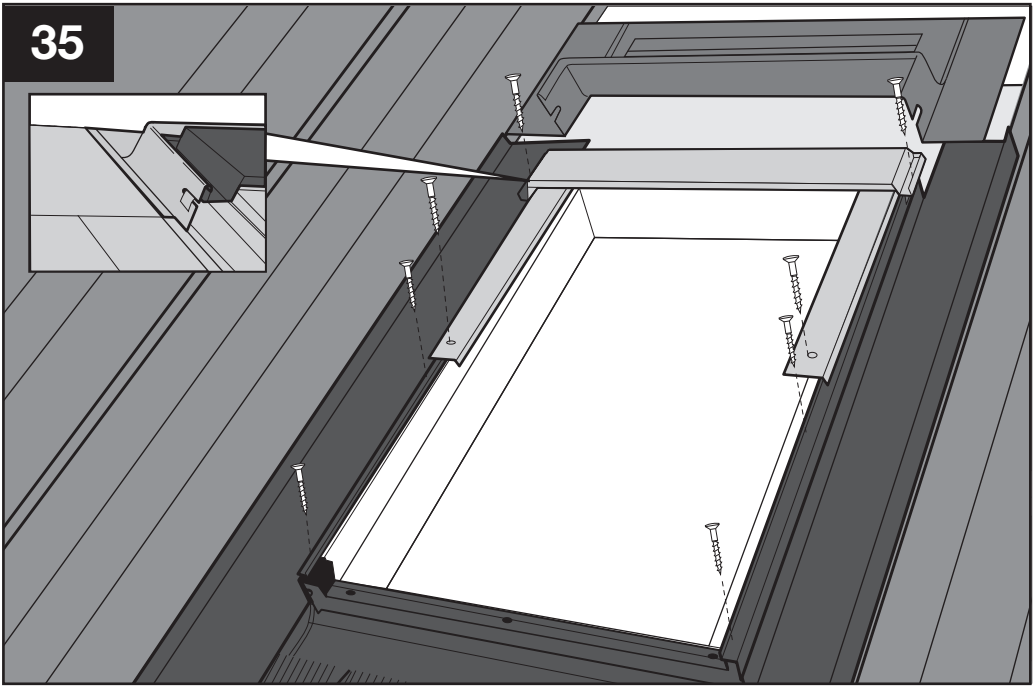
35

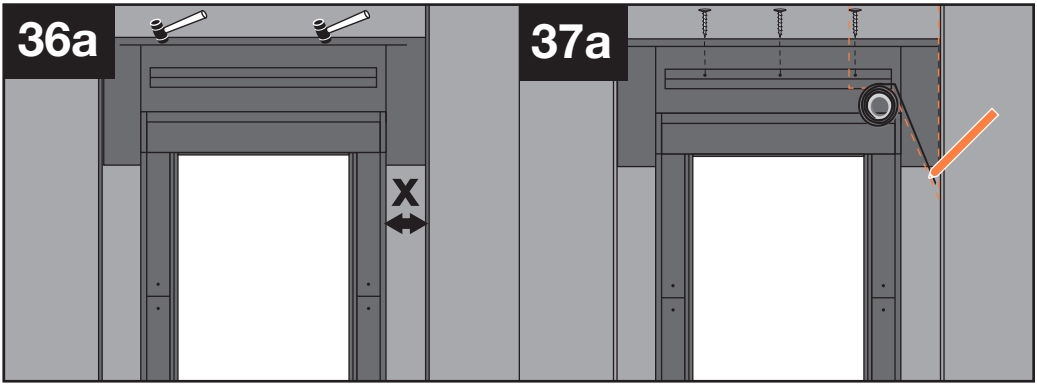
36a
X

37a

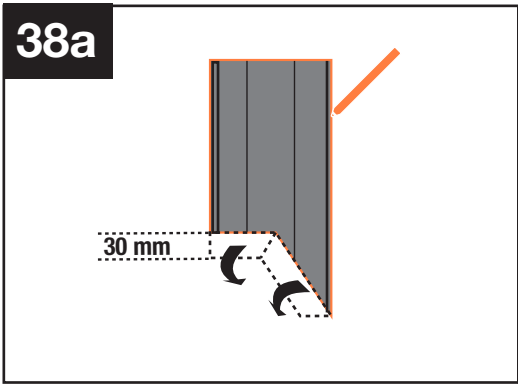
38a
30 mm

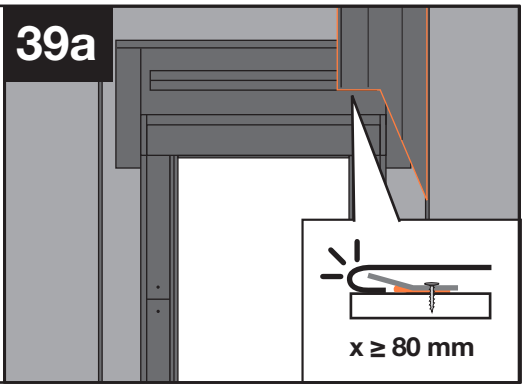
39a
x ≥ 80 mm

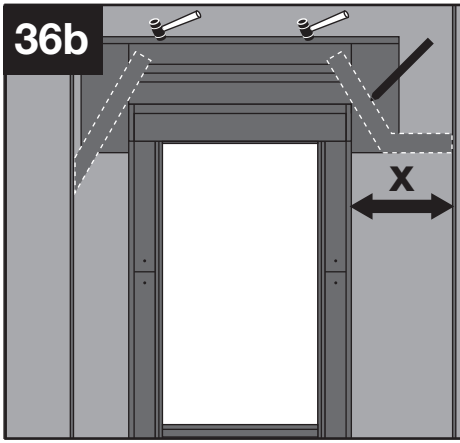
36b
X

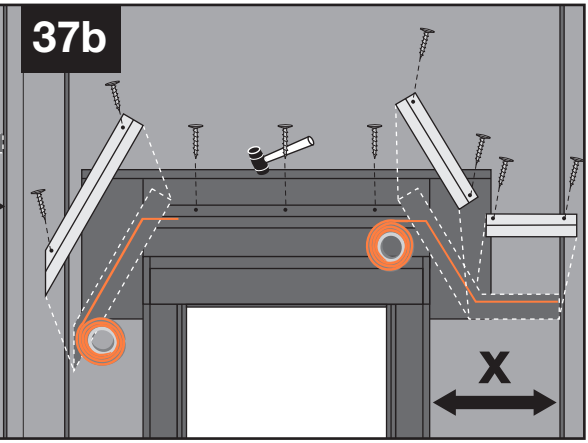
37b
X

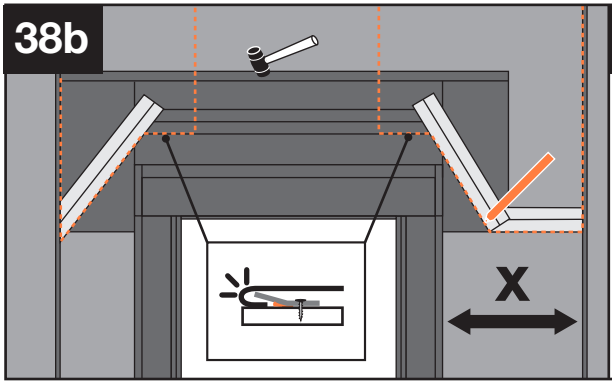
38b
X

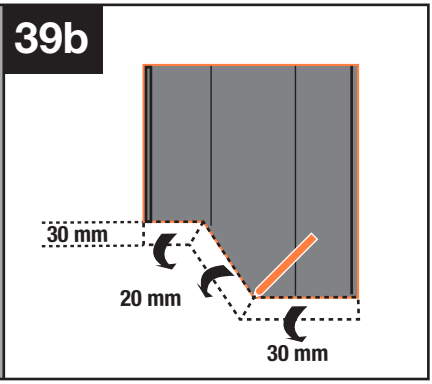
39b
30 mm
20 mm
30 mm

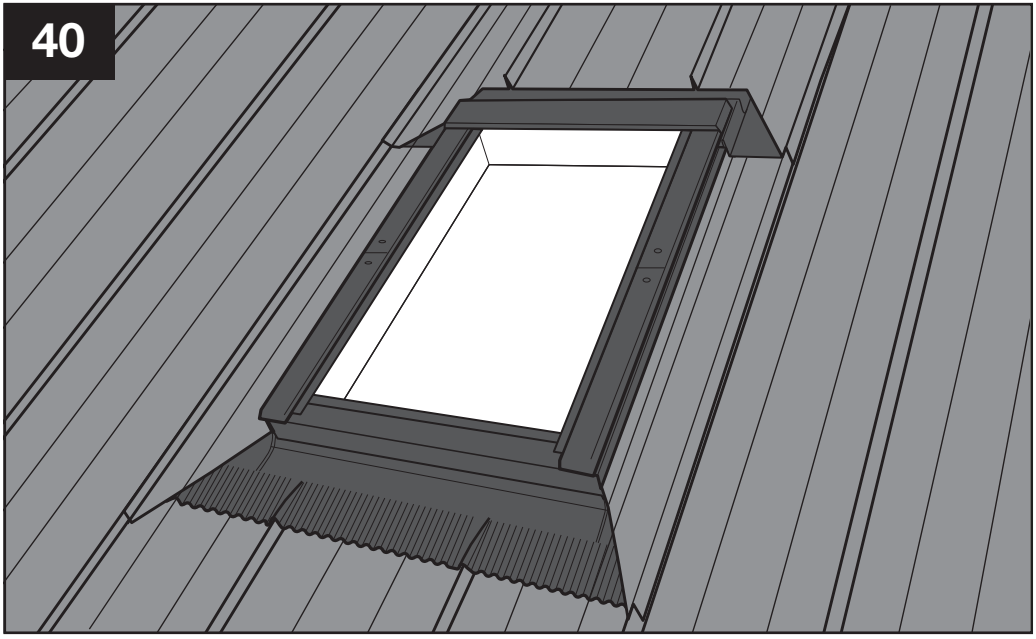
40